Product Specification

Fan Type	DC Backward Centrifugal Fan
Model	BE-B190B-EC-N07

Basic Parameters

Rated Voltage	VDC	48
Rated Speed	RPM	4500±5%
Max. Input Power	W	170
Max. Input Current	A	3.6
Sound Level	dBA	79
Min. Ambient Temperature	°C	-25
Max. Ambient Temperature	°C	60

Technical Features

Dimensions	190*190*68.5mm
Material of Impeller	Plastic
Direction of Rotation	Clockwise, Seen on Rotor
Surface of Rotor	Plastic Spraying
Type of Protection	IP44
Insulation Class	B
Operation Mode	S1
Bearing Type	Ball Bearing
Motor Protection	Locked Rotor Protection, Termal Protection, Less and Excessive Voltage Protection, Overcurrent Protection, Soft Start
Length of Cable	500±20mm
RoHS	All Material Accord with RoHS
Min./Max. Humidity	5% - 90% RH
Motor Type	External Rotor DC Motor
Deviation of Impeller in Axial Direction	≤ 0.5 mm
Deviation of Impeller in Radial Direction	≤ 0.5 mm

Air Performance

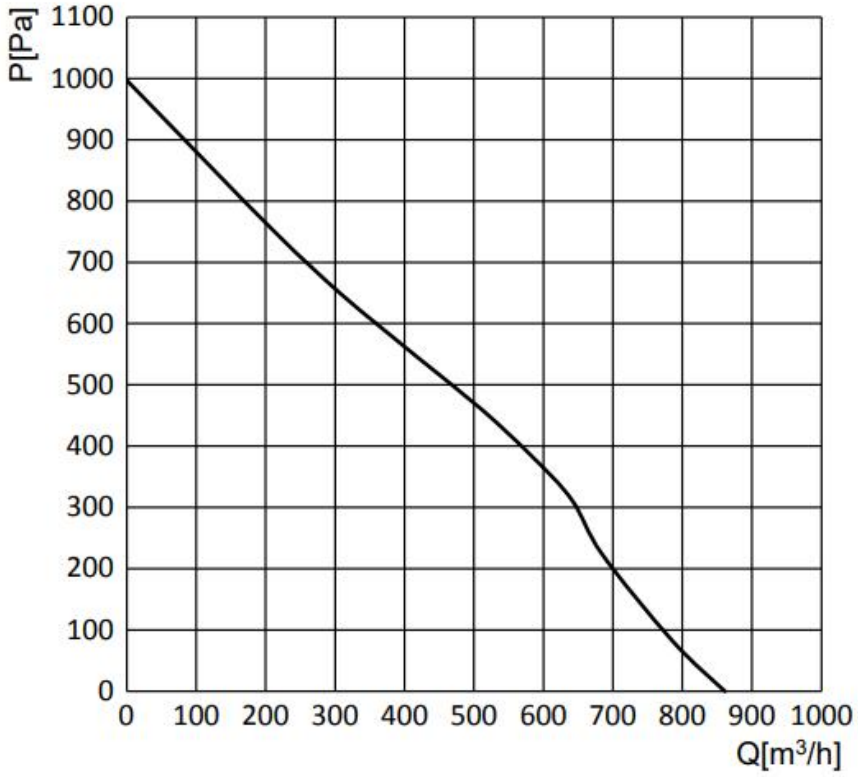

Outline Drawing

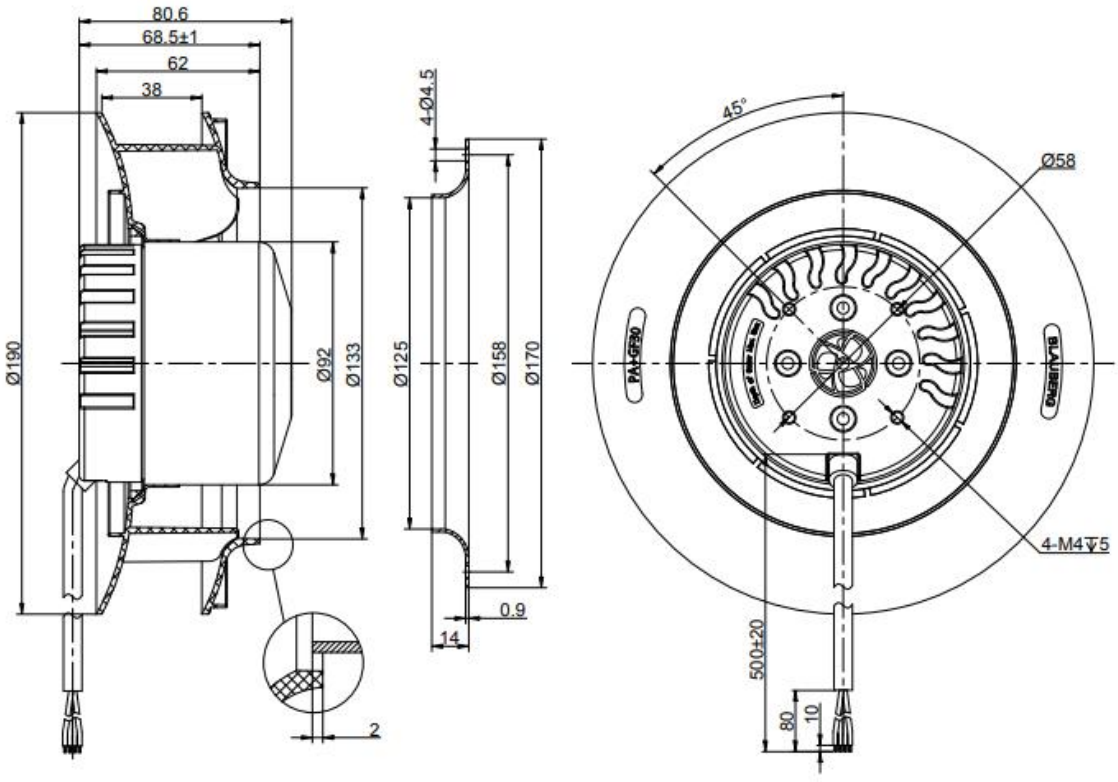

Wiring Diagram

Line	Connection		Color	Function
Power Line	U1	+	Red	Power Line (Positive Pole)
	U2	GND	Blue	GND
	U3	Speed Control	Yellow	0-10V & PWM Compatible Line
	U4	FG	White	RPM Output Signal Line

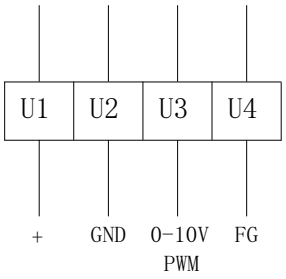

Additional Notes

1. The power line and control line of the fan should be connected in strict accordance with the wiring diagram to prevent the fan from burning out;

2. Do not connect the white signal wire directly to the red signal wire or the external DC power supply;

3.If the fan does not work after starting, please check the input voltage of the speed regulation, which may be improperly connected. To prevent hand or other personal injury caused by sudden start of the fan; Do not touch the impeller or rotor after electrifying;

4. It takes a few seconds for the fan to start after power on. In order to prevent personal injury, do not touch the impeller or rotor under the condition of electrifying or low speed operating;

5. Persons lacking physical, mental or sensory abilities and appropriate practical experience or expertise cannot use the fan unless directed by a person responsible for its safety. Keep out of reach of children.

6. If the power wire is damaged, the manufacturer must replace the power cord;

7. As a part of the fan, the motor cannot be used alone without impeller or load;

8. After the product packaging has been disassembled, it should be repackaged if it needs to be kept in storage. The product shall be stored in a clean, well-ventilated warehouse with ambient temperature of -40℃~+80℃, relative humidity of no more than 95%, no corrosive gases in the air, and 15cm above theground；

9.Please read this technical specification carefully before use.